ENG

DRIVES

ADV200-WA

EFFICIENT HVAC-R SYSTEM SOLUTIONS

GEFRAN

COD. 82191B

Gefran, With forty years of experience, Gefran is the world's leading designer and producer of solutions for **measuring, controlling, and driving industrial production processes**.
We have branches in 14 countries and a network of over 80 worldwide distributors.

INTELLIGENT AND SUSTAINABLE SYSTEMS

Process intelligence, environmental sustainability and economic sustainability are the three musts of modern pumping systems.

› Process Intelligence

The system should be able to monitor and control the main process parameters, such as flow, temperature, humidity and pressure, adapting them to actual demand.
The specific functions and macro applications of Gefran's products reduce noise and increase comfort, thus constituting the best response to the main requirements of HVAC-R applications.
The use of the inverter as a control system allows for pumps, fans and compressors to be operated highly efficiently, adjusting speed so that process requirements are followed quickly and accurately.

› Economic Sustainability

Routine maintenance, periodic maintenance and energy consumption are the cost items with the greatest impact on the system's Life-Cycle-Cost.
Mechanical part wear and elevated energy consumption caused by repeated on and off cycles, typical of fixed speed systems, are greatly reduced by the continuous speed controller, thus improving operating costs of the entiresystem.

› Environmetal Sustainability

Increasingly strict protocols impose limitations on the production of pollutants. Reducing the amount of electricity consumed will help improve our living environment.
By adjusting electric motor speed, the inverter modulates energy consumption and consequently CO_2 emissions.

AIR CONDITIONING

MINE VENTILATION

TUNNEL VENTILATION

DEHUMIDIFICATION AND DRYING SYSTEMS

STEEL PRODUCTION BLAST FURNACE VENTILATION

GLASS PRODUCTION FURNACE VENTILATION

SPECIFIC SOLUTIONS FOR HVAC-R SYSTEMS

"Heat – Ventilation – Air – Conditioning & Refrigeration" is the acronym used for systems designed and built to manage heating, ventilation and air refrigeration. Fans, pumps and compressors are at the heart of these multi-part systems.

When building complex systems, optimising the measuring, processing and control of process variables is of fundamental importance.

Measurement accuracy, quick response, efficiency and advanced control, are tasks that require effective optimisation, employing specific highly-technological products, enabling system Life Cycle Cost improvements, while guaranteeing the correct functioning of the entire process.

Having homogeneous solutions employing specific products designed to optimise communication, facilitate installation and maintenance, is undoubtedly a unique technological advantage for customers.

Gefran provides solutions offering complete automation, able to efficiently respond to the requirements of major applications in air management and treatment.

MEASURING

MEASURING

Sensors designed to ensure suitable accuracy, robustness and quick response are responsible for measuring and enable the entire process to be checked rapidly.

Constant Pressure Application Sensors

The **KS series** is specifically designed for applications requiring quick response and mechanical robustness.

The steel case and integrated damper protect the sensor from mechanical stresses and pressure peak damage (e.g. water hammer).

CONTROLLER AND PROCESS MONITORING

OPERATOR PANEL

The integrated Controller and Operator Panel **GF_VEDO series SL** allows the complete management of automation.

It is destined mainly to operate in an industrial environment on the control panels of production process machines or processes.

Available in 2 versions (35CT 3,5"color touch; 70CT 7" color touch for horizontal installation), and equipped with a powerful 400 MHz processor.

The operator interacts through a colour touch screen. Depending on the model, the size of the screen is 3.5" or 7" wide.

As an option, the device can be equipped with programmable function buttons.

Thanks to its numerous communication ports (some of which are optional), it is possible to connect a wide range of devices to the controller, such as computers, barcode readers, USB sticks, modems, printers, etc., and connect it to an Ethernet network.

The remote input and output modules (CAN-IO/GILOGIK II) are connected by bus to the CAN port (CANopen).

Other CANopen standard compliant devices can also be connected to the bus.

SPEED CONTROLLER

The controller manages pump speeds or, in more complex systems, the speed of several pumps.

THE DRIVE

The **ADV200 WA** drive is used in HVAC-R systems to enable efficient fan and compressor operation, thus avoiding oversizing during the design phase and enabling speed adjustment, in order that process requirements are followed quickly and accurately.

Specific functions, including selfcalibration of the PID controller and antiwind-up, enable quick and accurate checking of the main system parameters. For solutions requiring specific configurations, in which systems should be programmable to enable operation at certain times or to avoid specific frequencies which may lead to resonance of the system's mechanical parts, programming should be possible in just a few steps, which is rarely possible in the "General Purpose" drive.

"Custom" applications can be created with the integrated PLC, thus responding to any specific process management requirement.

AIR INLET

The air inlet can be used on systems employed both for private and industrial use.

Controlled ventilation systems, used to manage the exchange of air in indoor environments, employ fans to adjust air flow in relation to actual process requirements.
These requirements are dictated by checking variables, such as temperature, humidity, number of people present, and the amount of carbon dioxide.

The air inlet is employed in important industrial productions, in which air is used as part of the production process.

Air demand may vary during the production cycle and by controlling fan speed, air flow can be adjusted accordingly.

An example is that of steel production and glassmaking, where hot air is blown into the fusion combustion chambers using large fans.

INTRODUCTION OF AIR INTO COMBUSTION CHAMBERS

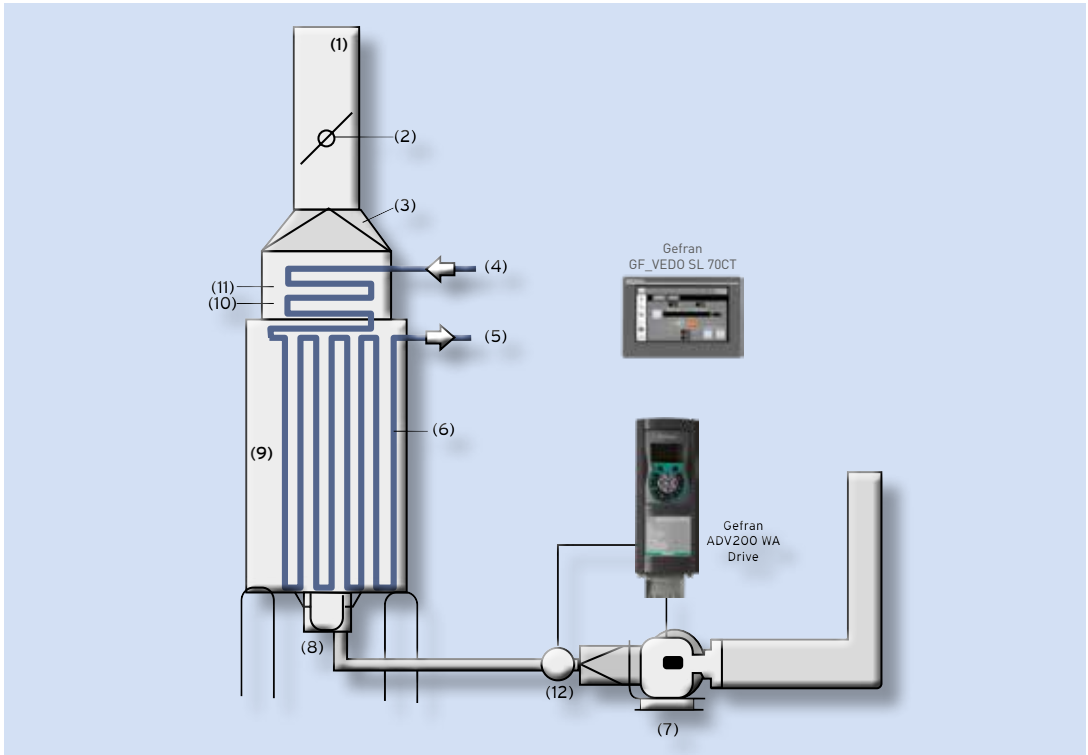

By means of the PID controller, the ADV200WA manages the air flow required by the process.

(1) Stack
(2) Damper
(3) Breeching
(4) HTF in
(5) HTF out
(6) Coil
(7) Air blower
(8) Burner
(9) Radiant section
(10) Shield section
(11) Convection section
(12) Flow sensor

FUME EXTRACTION

The main function is that of extracting air from closed environments by means of centrifugal or axial fans and conveying this air outside via ventilation ducts and chimneys.

Air is extracted from tunnels and car parks or underground stations to reduce the concentration of pollutants. The drive adjusts fan speed in accordance with CO/CO2 levels detected by the sensors.

In the industrial sector, the use of fans in fume extraction and treatment systems is essential to reduce the pollutants released to the atmosphere In such systems, the fumes produced by industrial processes are treated and purified before being released into the environment.

The fans move and convey the fumes through ducts and chimneys, while the drive adjusts speed in accordance with process requirements.

FUME TREATMENT SYSTEM EXTRACTION

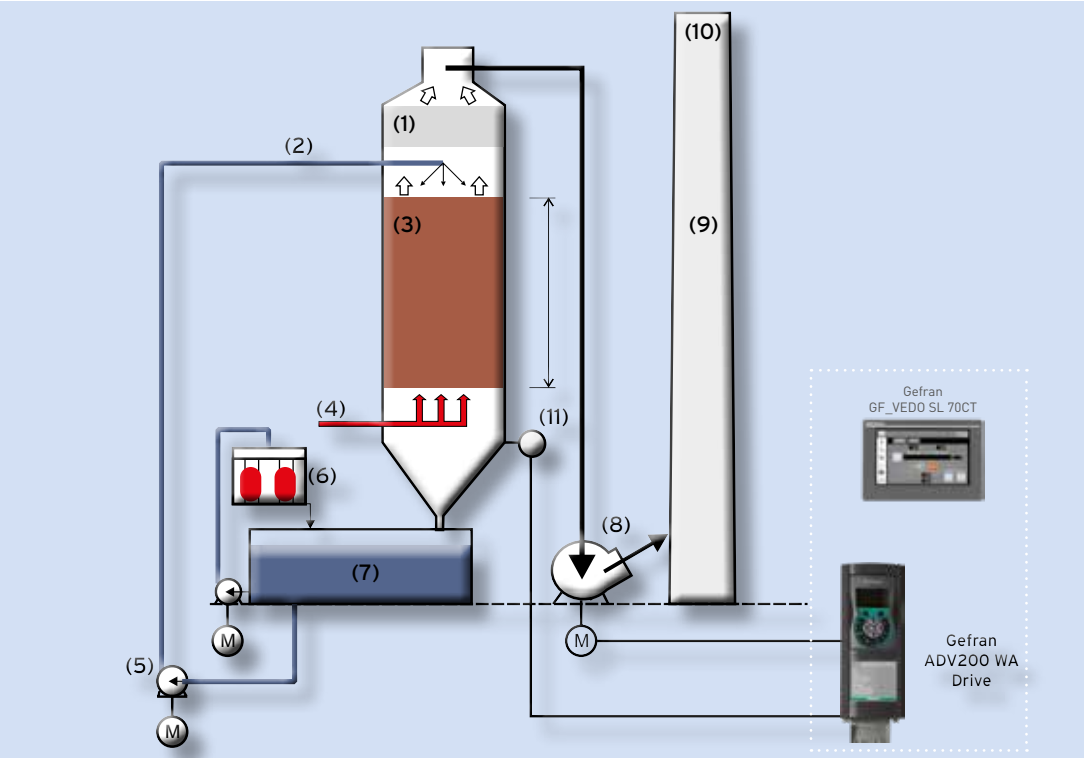

The combination of ADV200 WA and GF_VEDO SL facilitates management of the entire process.

(1) Drop separation
(2) Nozzle holder ramp
(3) Refrigeration bodies
(4) Inlet of air to be purified
(5) Impeller pump
(6) Sludge decanter
(7) Sedimentation tank
(8) Impeller fan
(9) Exhaust chimney
(10) Sampling connection
(11) Flow rate sensor

VARIABLE FLOW RATE SYSTEMS

These systems are designed to maintain environment temperature and humidity at desired levels by varying flow rate in accordance with parameters such as the presence of people and internal and external temperature differences.

By means of the PID regulator, the drive controlling the supply fan maintains pressure constant in the conduit at a predetermined setpoint value. Please refer to (9) in the figure below.

By means of the PID regulator, the drive controlling the return fan maintains the internal and external environment pressure differential constant.

ADV200 WA has a specific application macro for this type of application (supply and return) that enables easy system configuration and management.

AIR RECIRCULATION SYSTEM

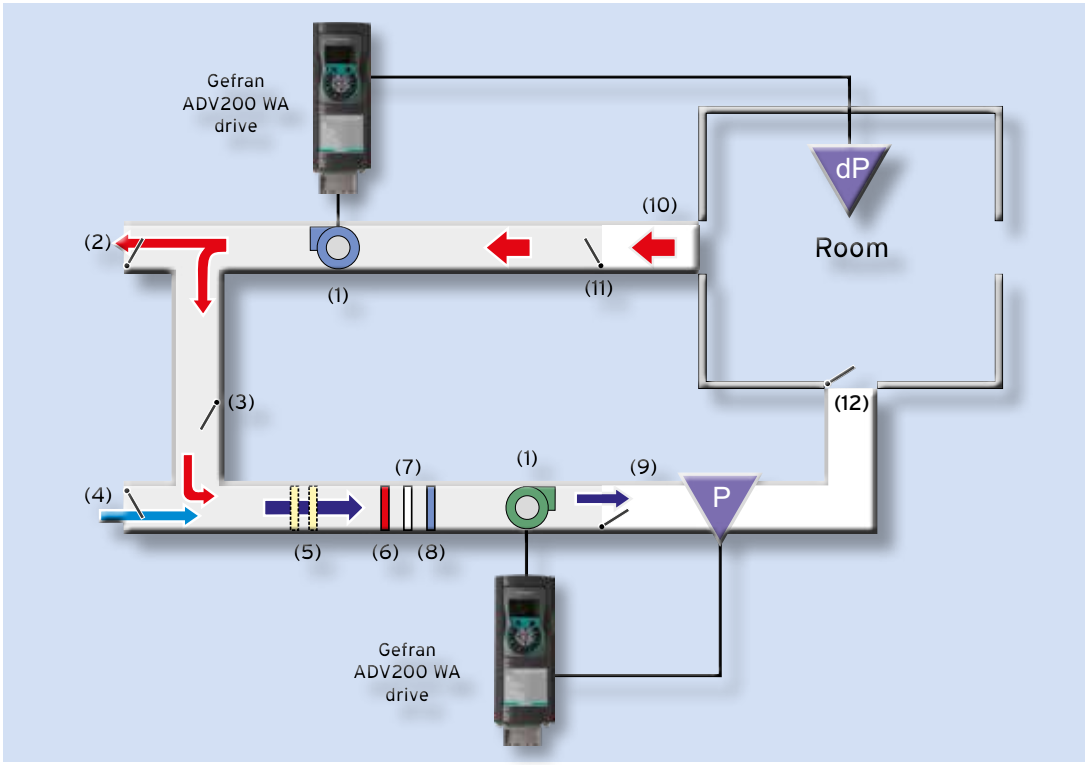

(1) Centrifugal fan
(2) Exhaust Flow to Outside
(3) Air Damper (for Return Flow)
(4) Cold Outside Air
(5) Filters
(6) Heating Coil
(7) Humidifier
(8) Cooling Coil
(9) Supply Flow (at set point)
(10) Warm Return from Room
(11) Bocchetta Out
(12) Bocchetta In

CENTRALISED AIR CONDITIONING

Centralised air-conditioning and refrigeration systems control air quality in closed environments.

Parameters such as temperature and humidity are constantly monitored and maintained within desired limits in relation to occupancy levels in the environment.

Heat pumps, chillers and dehumidifiers use fans, compressors and centrifugal pumps as moving parts of the system.

Use of the drive can be coupled with each moving part of the system performing multiple functions, such as process adjustment via the PID controller, energy consumption reduction, mechanical wear and noise emission reduction, thus increasing comfort and efficiency.

ADV200 WA has a specific macro for this type of application (condenser) that facilitates configuration and management.

BASIC REFRIGERATION SYSTEMS

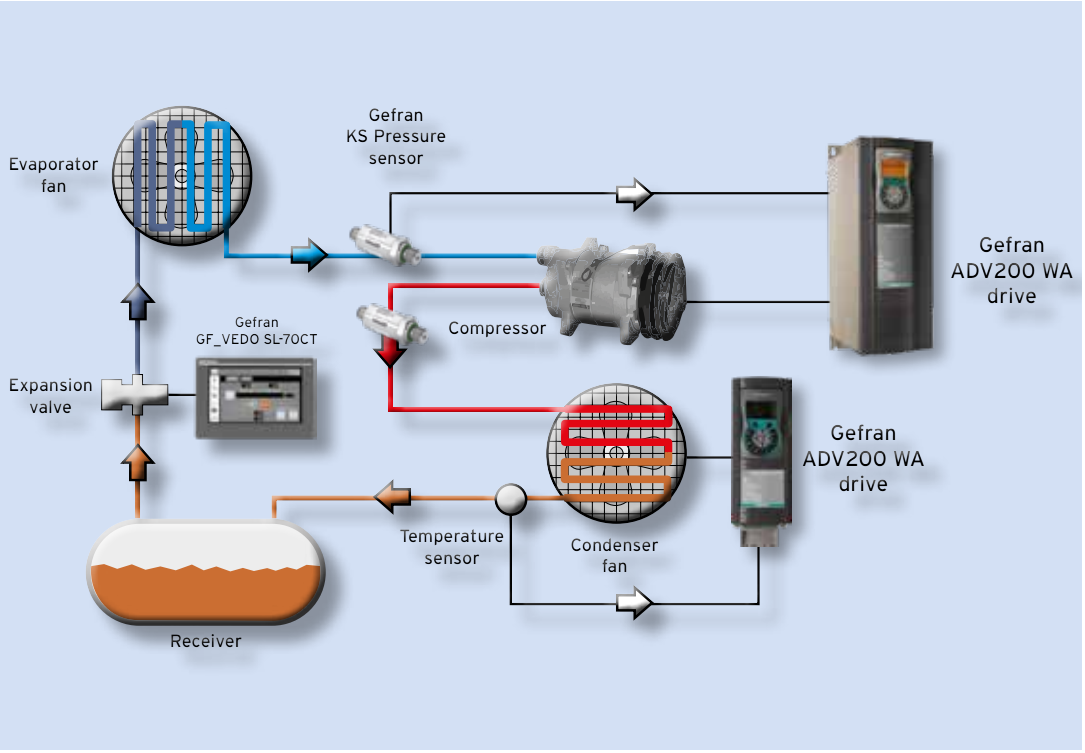

The drive controls compressor speed in accordance with a pressure setpoint.

The drive controls ventilator speed in accordance with a temperature setpoint.

KS • PRESSURE TRANSMITTER

KS transmitters are based on film sensing element deposited on stainless steel diaphragm.

Thanks to the latest state of the art SMD electronics and compact all stainless steel construction, these products are extremely robust and reliable, with SIL2 certification supplied as standard.

KS transmitters are suitable for all industrial applications, specially on hydraulics with severe conditions usually with high level of shock, vibration, and pressure and temperature peaks.

Features

- Ranges: from 0...1 bar to 0...1000 bar
- Accuracy (non-linearity, hysteresis and repeatability) <±0,25%FS typical
- ¼ gas male or ½ gas male process connection
- 0-10 V or 4-20 mA amplified output signal
- SIL2 certification supplied as standard (excluding 0-10V output)
- Overpressure 2 x FS; Bursting strength 4 x FS (max 1500 bar)
- Operating process temperature range -40...+125°C
- Compensated temperature range -20...+85°C
- Zero drift and span ±0,01% FS/°C typical
- IP65/IP67 protection class
- Response time max. < 1 msec
- Reduced dimensions (Ø 22 x 55 mm and 80 g weight)
- Shock 100g-11 msec; vibrations 20g from 10-2000 Hz sec. IEC 60068.

SIL CERTIFICATION

(Safety Integrity Level) - FUNCTIONAL SAFETY

Safety is a critical requirement especially for machine builders. The new European Directive 2006/42/EC defines all the essential requirements in this regard.

In the context of functional safety, the European directive is received by the technical standard **IEC/EN 62061** *"Safety of machinery - Functional safety of safety-related electrical, electronic and programmable electronic control systems"* (SRECS).

KS pressure transmitters are certified SIL CL 2 by the Certification Body TÜV Rheinland with Test Report No.FS 28712235, in accordance with that rule, for use in applications "High Demand Mode" and then may be used in SRECS systems of machinery, where the safety variable to control will be the pressure of a fluid.

NOTES:

1) The SIL certification is supplied standard, and is available for pressure ranges from 0 ... 10 bar and above.

2) For models with voltage amplified output, SIL certification is only available for versions with output at atmospheric pressure greater than zero volts (ie: 0.1 ... 10.1 V).

3) Full specifications and installation and user manual of KS certified SIL 2 can be downloaded directly from the website www.gefran.com.

PRESSURE PEAKS PROTECTION

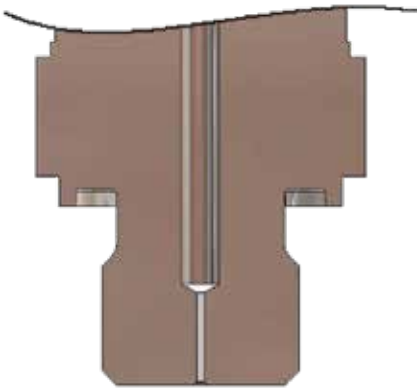

Many industrial applications, especially in hydraulics, could present dangerous phenomena like cavitation, liquid hammer or pressure peaks, due for example to pumps start and stop or fast closing of a valve.

These phenomena can be harmful to the transducer. The KS series, upon request, is available with an integrated pressure snubber which, thanks to a 0.5 mm diameter through hole, eliminates these harmful peaks, to protect the transducer.

TECHNICAL DATA

Output signal	VOLTAGE	CURRENT
Non Linearity (BFSL)	± 0.15% FS (typ) ± 0.25% FS (max)	
Hysteresis	+ 0.1% FS (typ) + 0.15% FS (max)	
Repeatability	± 0.025% FS (typ) ± 0.05% FS (max)	
Zero offset tolerance	± 0.15% FS (typ) ± 0.25% FS (max)	
Span offset tolerance	± 0.15% FS (typ) ± 0.25% FS (max)	
Accuracy at room temperature (1)	< ± 0.5% FS	
Pressure ranges (2)	From 1 bar to 1000 bar (See table)	
Resolution	Infinite	
Overpressure (without degrading performance)	See table	
Pressure containment	See table	
Pressure Media	Fluids compatible with Stainless Steel AISI 430F and 17-4 PH + o-ring in Viton	
Housing	Stainless Steel AISI 304	
Power supply	15...30Vdc	10...30Vdc
Dielectric strenght	250 Vdc	
Zero output signal	0 V (N); 0.1 V (C)	4 mA (E)
Full scale output signal	10 V (N); 10.1 V (C)	20 mA (E)
Allowed load	≥ 5KΩ	see load diagram
Long term stability	< 0.2% FSO/per year	
Operating temperature range (process)	-40...+125°C (-40...+257°F)	
Operating temperature range (ambient)	-40...+105°C (-40...+221°F)	
Compensated temperature range	-20...+85°C (-4...+185°F)	
Storage temperature range	-40...+125°C (-40...+257°F)	
Temperature effects over compensated range (zero)	± 0.01% FS/°C typ. (± 0.02% FS/°C max.)	
Temperature effects over compensated range (span)	± 0.01% FS/°C typ. (± 0.02% FS/°C max.)	
Response time	(10...90%FS) < 1 msec.	
Warm-up time (3)	< 30 sec.	
Mounting position effects	Negligible	
Humidity	Up to 100%RH non-condensing	
Weight	80-120 gr. nominal	
Mechanical shock	100g/11msec according to IEC 60068-2-27	
Vibrations	20g max a 10...2000 Hz according to IEC 60068-2-6	
Protection degree	IP65/IP67	
Output short circuit and reverse polarity protection	YES	
CE Conformity	According to EC Directive 2014/30/EU	

FS = Full scale
(1) Incl. Non-Linearity, Hysteresis, Repeatability, Zero-offset and Span-offset (acc. to IEC 61298-2)
(2) The operating pressure range is intended from 0.5% to 100% FS
(3) Time within which the rated performance is achieved.

LOAD DIAGRAM

Current output

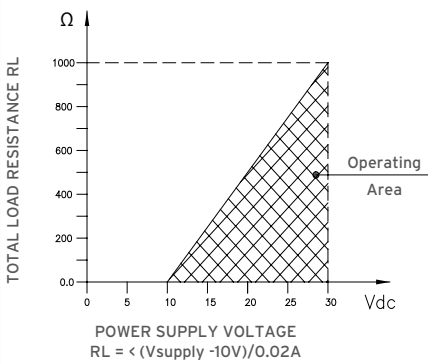

PRESSURE RANGE (Bar)	Sovrapressure (Bar)	Burst pressure (Bar)
1	6	9
1.6	6	9
2	6	9
2.5	10	15
4	10	15
6	20	30
10	20	40
16	32	64
20	40	80
25	50	100
40	80	160
60	120	240
100	200	400
160	320	640
200	400	800
250	500	1000
400	800	1500
600	1200	1500
1000	1200	1500

GF_VEDO SL SERIES • INTEGRATED CONTROLLERS AND OPERATOR TERMINALS

GF_VEDO SL-70CT

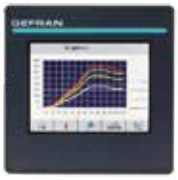

GF_VEDO SL-35CT

Main features

- PLC + HMI in a single product
- Integrated Ethernet port
- Widely available communication ports
- One single programming environment

Management
The GF_VEDO SL control and display unit facilitates complete system management.
Intuitive and efficient graphics enabling rapid synoptics, in combination with an integrated controller [PLC IEC61131.3], allow a complete control of the entire system.

Data-logging
Data storage and display are fundamental elements.
Data can be exported easily using the internal memory and SD card expansion, while color graphical trends enable immediate viewing of performance.

Reporting
Data reports, alarm history and easy export to USB and/or Ethernet line are functions that facilitate proper maintenance and prevention of system failures.

Remote Control
Systems can be controlled and viewed remotely via connections to company LANs, modems.

All parameters are available through different levels of security providing complete system diagnostics.

TECHNICAL DATA

		35CT	70CT
POWER	Operating voltage	24 Vdc ±25%	
	Absorbed current (at 24 Vdc)	300 mA max	350 mA max
	Dissipated power	7.5 W max	8.5 W max
	Protections	Protection for polarity inversion Short circuit	
	Connection	3-pole polarised extractable connector Screw terminals. max wire section 2.5 mm²	
BACK-UP BATTERY	Type	Rechargeable Li-Al 3 V 65 mA/h, type ML2032, non-replaceable	
	Duration	10 years - in absence of power: 20 months	
CONNECTIONS	CAN Port	Opto-isolated Connector: DB9 M Speed: 10 kbit/s ... 1 Mbit/s Termination: to be managed externally	
	Ethernet Port (ETH)	Connector: RJ45 Speed: 10 / 100 Mbit/s Signals: green connection LED, yellow data LED	
	RS-485 Port (optional)	Opto-isolated Connector: DB9 M Speed: 9.6 kbit/s ... 115 kbit/s	
	RS-232 Port (optional)	Connector: DB9 M Speed: 9.6 kbit/s ... 115 kbit/s	
	USB Port (optional)	Connector: type A Standard: USB 2.0	
COMMUNICATIONS PROTOCOLS	Ethernet	FTP (File Transfer Protocol) Modbus TCP/IP Master/Slave	
	CAN	CANopen Master	
	Modbus	Modbus RTU Master/Slave	
DISPLAY	Type	TFT touch screen with 4-wires resistive technology	
	Dimensions (diagonal)	3.5"	7" horizontal
	Resolution in pixels	320 x 240 (QVGA)	800x480(WVGA)
	Display area (W x H)	70 x 52.5 mm	152.4x91.4mm
	Colors	262.000	
	Brightness	400 cd/m²	240 cd/m²
	Contrast	400:1	1000:1
	Backlighting	White LEDs, duration 50,000 hours @ 25 °C	
	Visual angle	Horizontal: 60° Vertical: 45°-60°	85° in all directions
CONFIGURATION ELEMENTS	Procedure software access	16-position dial	
CONTROL ELEMENTS	Keypad (optional)	6 programmable function buttons	10 programmable function buttons
MICROPROCESSOR	Type	ARM9	
	Frequency	400MHz	
MEMORY	System	64 MB, type SDRAM	
		• 12 MB applicative HMI	
		• 2,5 MB applicative PLC	
	Retentive	• 32 kB retentive variables (FLASH / FRAM)	
		• 1 MB data logger (FLASH)	
	Mass	128 MB, type FLASH	
		• 32 MB for user	
	Mass extension	Slot SD Card (optional)	
ENVIRONMENTAL CONDITIONS	Operative temperature	0 ... +50 °C (according to IEC 68-2-14)	
	Storage temperature	-20 ... +70 °C (according to IEC 68-2-14)	
	Relative humidity	95% RH non condensing (according to IEC 68-2-3)	
ASSEMBLY		Embedded, in control panels	
DEGREE OF PROTECTION		IP 65 on the front (according to IEC 68-2-3)	
WEIGHT		0.25 kg	0.5 kg
CE STANDARDS	EMC conformity (electromagnetic compatibility)	Observance of directive 2004/108/CE EMC Emission: EN 61000-6-4 EMC Immunity: EN 61131-2, EN 61000-4-2, EN 61000-4-3, EN 61000-4-4, EN 61000-4-5, EN 61000-4-6, EN 61000-4-8, EN 61000-4-11	
	LV conformity (low voltage)	Observance of 2006/95/CE Safety LVD: EN 61010-1	

A RANGE FOR EVERY SYSTEM REQUIREMENT

ADV200 WA (Water & Air) draws specific pump, fan and compressor management functions together into a single product for both private and industrial use.

- 7 different mechanical sizes
- Power from 1.5kW to 1.8MW
- Three-phase supply voltage at 400, 575, 690 Vac at 50/60Hz
- Open loop vector control and Voltage/Frequency.

ELECTRICAL PANEL CONFIGURATIONS

Electrical panel inverters with IP31 and IP54 protection ratings are available in "Ready to Use" and "Basic" configurations for power ratings from 90kw to 1800kW.

- Ready to Use: complete panel, ready for installation. The panel is pre-assembled with the entire power section, as well as all the necessary auxiliaries and push-button panels at the system start.
- Basic: equipped with the power section only, without any auxiliary circuitry. The choice of auxiliary circuit systems is left to the customer, in accordance with their specific needs.

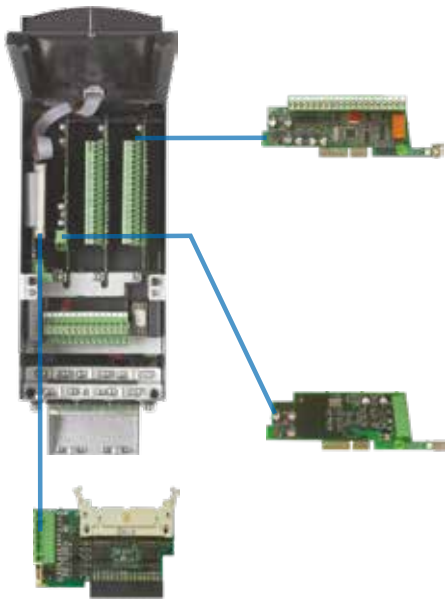

› Safety Card

Integrated on board the drive as the 4th option, the EXP- SFTy card allows the motor to be disabled without the use of a safety contactor on the drive output. It guarantees compliance with the machine safety directive and meets the following standards:

- PL=e according to EN ISO 13849-1
- SIL 3 according to IEC 61508
- category 3 according to EN 954-1.

OPTIONS

ADV200 WA manages up to 3 option cards:

› I/O expansions

Option	Description
EXP-IO-D6A4R1-ADV	4 digital inputs / 2 digital outputs / 2 analog inputs / 2 analog outputs / 2 double contact relays
EXP-IO-D5R8-ADV	4 digital inputs / 1 digital output / 8 single contact relay output (or 4 double contact relays, programmable via software) for cascade control of pumps
EXP-IO-SENS-1000-ADV	3 analog inputs / 2 analog outputs to acquire signals from PT1000, NI1000, 0-10V, 0/4...20mA, KTY84, PTC (motor overtemperature control only)
EXP-IO-SENS-100-ADV	3 analog inputs / 2 analog outputs to acquire signals from PT100, 0-10V, 0/4...20mA, KTY84, PTC (motor overtemperature control only)

› Fieldbus interface

Option	Description
EXP-CAN-ADV	Expansion card for CANopen ® and DeviceNet
EXP-PDP-ADV	Expansion card for Profibus-DP interface
EXP-ETH-GD-ADV200	Ethernet GD-net interface expansion card
EXP-ETH-CAT-ADV200	EtherCAT interface expansion card
EXP-ETH-IP-ADV200	Ethernet IP interface expansion card
SBI_LonWorks	LonWorks interface expansion card (*)
SBI_BACnet MS/TP	BAC net interface expansion card for MS/TPnetworks (*)
SBI_BACnet/IP	BAC net interface expansion card for IP networks (*)

(*) external optional

CANopen EtherCAT GDNET DeviceNet BACnet LonWorks PROFIBUS Modbus EtherNet/IP

BACnet® is a registered trademark of ASHRAE.
LonWorks® powered by Echelon is a a registered trademark of Echelon Corporation.

PROCESS CONTROL FUNCTIONS

- **PID controller automatic selfcalibration**: the optimum combination of Proportional and Integrative gains is calculated, controlling the process in relation to the desired setpoints.
- **Programming Clock**: the driver features built-in programmable clocks to adjust inverter's operation on a weekly and daily basis.
- **Resonance frequency jump**: stopping of the engine at frequencies that can lead to system resonance through increasing noise and vibration can be avoided.
- **Fire protection and bypass operation**: in the event of a fire (i.e., in tunnels) the driver ignores the main alarms and continues to operate until destruction. By enabling the bypass function instead, once a certain temperature has been reached, the driver is excluded and the motor is supplied directly from the mains.
- **Immediate hook-up**: allows for the drive to be hooked up to a rotating motor through inertia or by being dragged by the load following, for example, a "drop" in power supply.
- **Belt breakage alarm**: the driver detect a fan belt breakage, stops the motor and generates an alarm.

MACRO APPLICATIONS

Macros are predefined applications, available in the drive and specially developed for main HVAC-R systems. Macros reduce the commissioning and management time.

- **Supply ventilation**: the drive controls the speed of the fan that adjusts the flow of air introduced into the environment in accordance with data received from CO2, pressure or temperature transducers. Thanks to the double PID control, the opening or closing of a shutter can be controlled in accordance with the signal received from a second transducer.
- **Blower fan**: the drive is able to control fan speed via the PID controller, adjusting flow in accordance with data received from the pressure transducers. The blower fan controls pressure differences between the blower channel and the outside environment, maintaining pressure at a desired value.
- **Evaporation Tower**: the drive controls the fans installed in the evaporation tower in relation to the temperature detected by the sensors and the setpoint.
- **Condenser**: the drive controls fan speed in accordance with feedback from a transducer, typically a temperature transducer. Optimised control stabilises pressure inside the condenser, facilitating control of pressure differences between the condenser and evaporator.
- **HVAC Standard**: The drive controls fan or compressor speed in accordance with commands received from a BMS (Building Management System). Analogue and digital interfaces are available, together with the most common fieldbuses, to enable integration and communication with the automation system.

ADV200 WA

QUICK INSTALLATION AND COMMISSIONING

The man-machine interface is simple and intuitive thanks to the immediate start-up features of the wizard tool available in more than one language.

The interface features two modes - Easy and Expert - satisfying any user level and meeting programming needs of varying complexity.

The inverter is managed with a 4—line, 21 character alphameric LCD keypad that displays all of the parameters and provide rapid navigation.

The keypad is able to store up to 5 complete sets of drive parameters, enabling drive configuration uploading and downloading.

ADV200 WA offers programming in 5 languages (English, Italian, French, German, Spanish) as standard.

INTEGRATED PLC FLEXIBILITY AND CUSTOMISATION

Motion Drive Programmable logic controller (MDPlc) is the Gefran software solution that allows for application writing, compiling, downloading and debugging using a graphical interface.

The tool generates the application code directly in machine language, compiling the written application in PLC languages that comply with the IEC 61131-3 international standard, providing the user with 5 languages for the programming of applications:

- Instruction List (IL)
- Structured Text (ST)
- Ladder Diagram (LD)
- Function Block Diagram (FBD)
- Sequential Flow Chart (SFC)

The application can be developed accessing all drive variables and parameters, including system (processor) and adjustment (for example, voltages and instant currents).

All drive and application variables can be accurately viewed numerically and graphically in special windows thanks to 1-ms synchronous acquisition buffering.

The application is able to exchange data directly with the supervisory PC/PLC or remote I/O modules using the fieldbus available in the drive.

A series of diagnostic tools are integrated in the MDPLc tool. These tools optimise application troubleshooting, highlighting programming errors displayed in a special window during compilation.

Applications can be created in certain industrial processes or in waterworks located in small and medium sized urban centres without requiring the installation of external PLCs, thus limiting initial and management costs.

TECHNICAL CHARACTERISTICS

		ADV200 WA-4	ADV200 WA-4-DC	ADV200 WA-6	ADV200 WA-6-DC
Power supply		3 x 380VAC -15% ... 500VAC +5%	450...750VDC;	3 x 690VAC ±10%; 50-60 Hz ± 2% (5750 ... 61320), 3 x 500...690VAC ±10%; 50-60 Hz ± 2% (71600 ... 1000kW)	840 ... 1120VDC (5750 ... 61320); 600 ... 1120VDC (≥ 71600)
Power ratings		from 1.5kW to 1.2MW	from 22kW to 1.2MW	from 75kW to 1.2MW	from 250kW to 1.2MW
Maximum output voltage		0.98 x ULN	0.98 x ULN (1)	0.95 x ULN	0.95 x ULN (1)
Maximum output frequency f2		1015...72500: 500Hz ≥ 73150: 200Hz	3220...72500: 500Hz ≥ 73150: 200Hz	5750...6900: 400Hz 61100...61320: 200Hz 72000: 500Hz ≥ 72500: 200Hz	72000: 500Hz ≥ 72500: 200Hz
IGBT braking unit		1015 ... 3300: Internal (with external resistor) 4370 ... 5750: Internal optional (with external resistor) Sizes ≥ 5900: External optional (BUy series)	External optional (BUy-4 series)	External optional (BUy-6 series)	
Overload		Light Duty: 110 % x In (for 60") Heavy Duty: 150 % x In (1' each 5'), 180 % x In (for 0.5")		Sizes 5750...6900: Light Duty: n.a. Heavy Duty: 136 % x In (for 60"), 183 % x In (for 0.5") Sizes ≥ 72000: Light Duty: 110 % x In (for 60"); Heavy Duty: 150 % x In (1' each 5'), 180 % x In (for 0.5")	
Control mode		Open-loop vector control Open loop V/f and V/f with feedback			
Optional cards		Integration of up to 3 options onboard the drive			
		"Safety STO" card compliant with SIL3 machine safety directive (for ADV200WA-...+SI models) EXP-IO-SENS-100-ADV, EXP-IO-SENS-1000-ADV and EXP-IO-D5R8-ADV cards			
Standard supply configuration	**Programming keypad**	Integrated KB_ADV			
	Control	• 2 bipolar analog inputs (Voltage/Current) • 2 bipolar analog outputs (1: Voltage/Current, 1: Voltage) • 6 digital inputs (PNP/NPN) • 2 digital outputs (PNP/NPN) • 2 relay outputs, single contact • RS485 serial line (Modbus RTU)			
	Power	• Integrated choke DC side (up to 160 kW) • Integrated mains filter • Integrated dynamic braking module (up to 75kW), external optional (>90kW)			
	Reference resolution	• Digital = 15bit + sign • Analog input = 11-bit + sign • Analog output = 11-bit + sign			
Conformity	**Immunity/Emissions**	CEE - EN 61800-3			
	Safety standards	EN 50178, EN 61800-5-1, UL508C, UL840 degree of pollution 2 STO (Safe Torque Off): IEC 61508 SIL 3, EN 954-1 Categ. 3 EN 61508 and EN 61800-5-2			
Environmental conditions	**Ambient temperature**	-10°C ...+40°C, +40°C...+50°C with derating			
	Altitude	Max 2000 m. (up to 1000 m without derating)			
Markings	CE	Complies with the EC directive concerning low voltage equipment (Directives LVD 2014/35/EC, EMC 2014/30/EC).			
	cULus	ADV200WA-4 and ADV200WA-4/4A-DC: UL and cULus, complies with directives for the American and Canadian markets.			

(1) AC Input voltage from separate SM32 or AFE200 power supply unit

ENERGY SAVING TOOL, SOFTSCOPE, GF_eXpress & GF_PROJECT

Gefran has developed a specific software tool for pumping systems, which enables users to quantify energy savings achieved when using ADV200 WA series inverters with respect to main control systems with fixed speed motorisation.

When system data are inserted, the software calculates energy and economic savings, and provides informations on the payback period.

Software for **energy saving calculations**

SoftScope: software oscilloscope

SoftScope is a software **software oscilloscope** with synchronous sampling (buffered with a minimum sample period of 1ms).

Thanks to SoftScope, the user is able to quickly and easily view variables of interest i.e. commissioning, checking of achieved performance and control loop calibration.

SoftScope lets you set the following parameters:

- Trigger condition (i.e. rising edge of a given signal)
- Recording quality (a multiple of the 1-ms clock base)
- Recording length
- System quantities to be recorded.

The curves can be represented in various colors and activated and deactivated in accordance with requirements. Details can be e larged using the zoom function, while signal peaks and duration can be o served using the cursor.

Any recorded data is represented as a curve with a time base for analysis. Displayed curves can be printed for documentation purposes or memorised in ASCII format and then analysed using common data analysis tools (for example, Excel, Matlab).

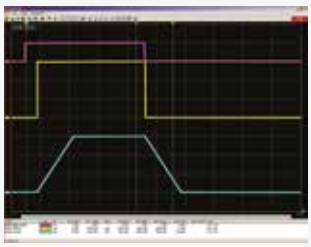

1) start command
2) ramp input speed reference
3) ramp output

Speed cycle
Start, 1500 rpm ramp reference, ramp output reaches 1500 rpm,
Stop, 0 rpm ramp reference, ramp output reaches 0 rpm.

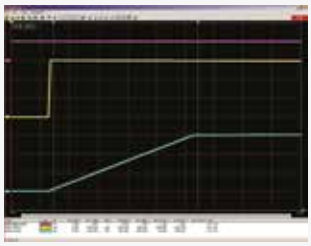

1) start command
2) ramp input speed reference
3) ramp output

Zoom
Ramp output phase from 0 rpm to 1500 rpm of the previous cycle.

All Gefran products (Drives, Sensors and automation Components) can be managed via a PC using the GF eXpress tool enabling configuration and parameterisation.

The selection of the product to configure is easy and intuitive thanks to a graphical interface featuring real product images sorted by type and function.

The selected product can be configured in several languages in two different ways:

- Using a sub-set of predefined parameters
- Using a graphical interface wizard with context menus.

Custom configuration menus can be created following either procedure.

GF eXpress: one software only for configuring

GF_Project LX is the **integrated development environment** (IDE) for real-time control applications of Gefran automation, sensor and drive devices.

GF_Project LX includes a series of tools to develop variuos application solutions and all design phases, such as maintenance or integration application software, testing and commissioning.

GF_Project LX is able to:

- Develop automation solutions while safeguarding application-configuration investments and reducing time to market.
- Build applications that fully control machines and systems, as well as graphical interface configurations.
- Develop multiplatform solutions.
- Reduce learning times, enabling guided development and the elimination of configuration errors by exploiting graphical type configurations.
- Easily reuse parts of existing projects.

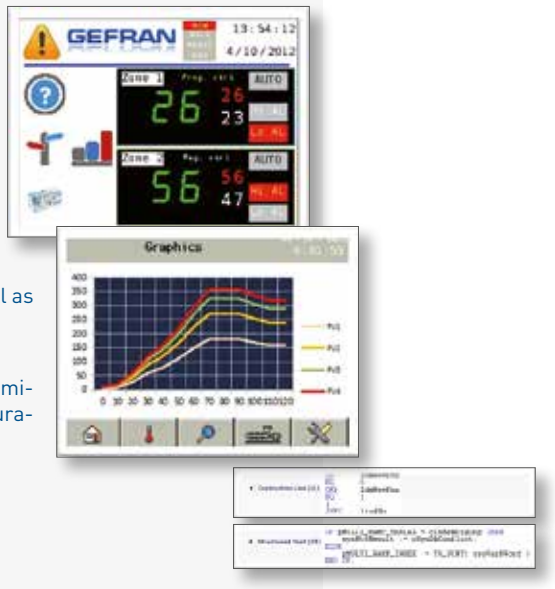

GEFRAN S.p.A. reserves the right to make changes and variations to products, data, dimensions at any time without the obligation of prior notice.
The data indicated are provided for the sole purpose of describing the product and must not be considered as legally binding characteristics.

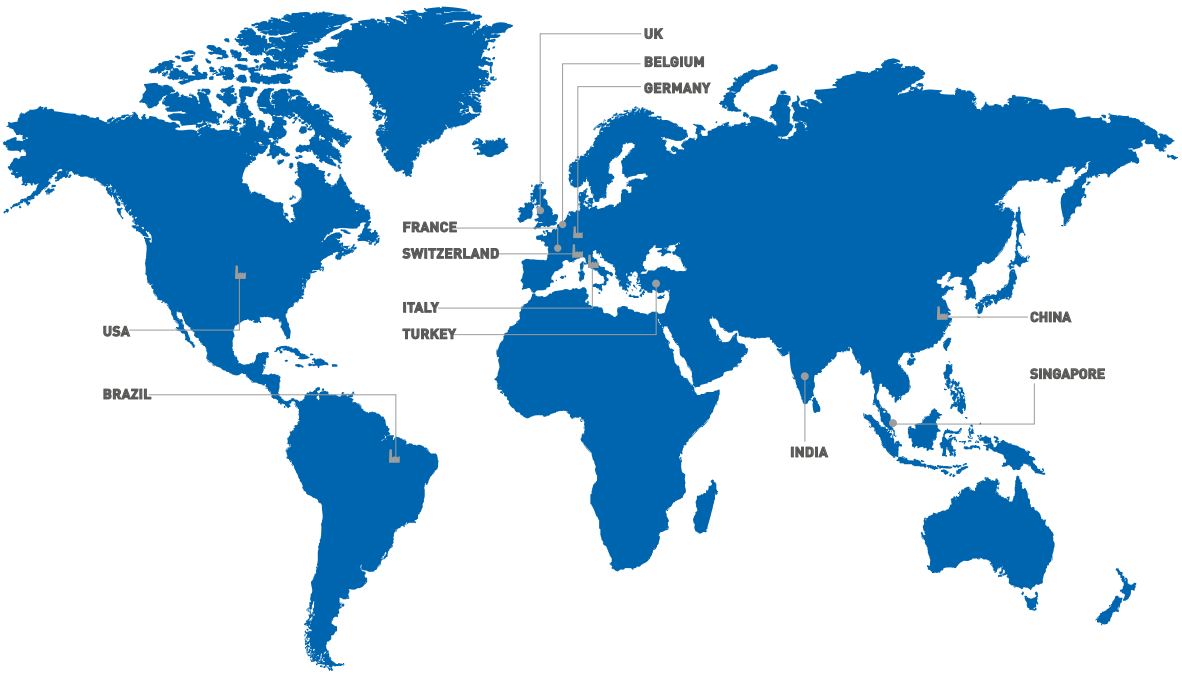

GEFRAN DEUTSCHLAND GmbH

Philipp-Reis-Straße 9a
D-63500
Seligenstadt
Ph. +49 (0) 61828090
Fax +49 (0) 6182809222
vertrieb@gefran.de

SIEI AREG - GERMANY

Gottlieb-Daimler Strasse 17/3
D-74385
Pleidelsheim
Ph. +49 (0) 7144 897360
Fax +49 (0) 7144 8973697
info@sieiareg.de

SENSORMATE AG

Steigweg 8,
CH-8355 Aadorf, Switzerland
Ph. +41(0)52-2421818
Fax +41(0)52-3661884
http://www.sensormate.ch

GEFRAN FRANCE SA

PARC TECHNOLAND
Bâtiment K - ZI Champ Dolin
3 Allée des Abruzzes
69800 Saint-Priest
Ph. +33 (0) 478770300
Fax +33 (0) 478770320
commercial@gefran.fr

GEFRAN BENELUX NV

ENA 23 Zone 3, nr. 3910
Lammerdries-Zuid 14A
B-2250 OLEN
Ph. +32 (0) 14248181
Fax +32 (0) 14248180
info@gefran.be

GEFRAN UK Ltd

Clarendon Court
Winwick Quay
Warrington
WA2 8QP
Ph. +44 (0) 8452 604555
Fax +44 (0) 8452 604556
sales@gefran.co.uk

GEFRAN MIDDLE EAST ELEKTRIK VE ELEKTRONIK San. ve Tic. Ltd. Sti

Yesilkoy Mah. Ataturk
Cad. No: 12/1 B1 Blok K:12
D: 389 Bakirkoy /Istanbul TURKIYE
Ph. +90212 465 91 21
Fax +90212 465 91 22

GEFRAN SIEI Drives Technology Co., Ltd

No. 1285, Beihe Road, Jiading
District, Shanghai,
China 201807
Ph. +86 21 69169898
Fax +86 21 69169333
info@gefran.com.cn

GEFRAN SIEI - ASIA

31 Ubi Road 1
#02-07,
Aztech Building,
Singapore 408694
Ph. +65 6 8418300
Fax +65 6 7428300
info@gefran.com.sg

GEFRAN INDIA

Survey No. 191/A/1,
Chinchwad Station Road,
Chinchwad,
Pune-411033, Maharashtra
Ph. +91 20 6614 6500
Fax +91 20 6614 6501
gefran.india@gefran.in

GEFRAN Inc.

8 Lowell Avenue
WINCHESTER - MA 01890
Toll Free 1-888-888-4474
Fax +1 (781) 7291468
info.us@gefran.com

GEFRAN BRASIL ELETROELETRÔNICA

Avenida Dr. Altino Arantes,
377 Vila Clementino
04042-032 SÃO PAULO - SP
Ph. +55 (0) 1155851133
Fax +55 (0) 1132974012
comercial@gefran.com.br

GEFRAN HEADQUARTER

Via Sebina, 74
25050 PROVAGLIO D'ISEO (BS) ITALY
Ph. +39 03098881
Fax +39 0309839063

GEFRAN DRIVES AND MOTION S.R.L.

Via Carducci, 24
21040 GERENZANO (VA) ITALY
Ph. +39 02967601
Fax +39 029682653
info.motion@gefran.com
Technical Assistance:
technohelp@gefran.com
Customer Service
salesmotion@gefran.com

FM 608910

www.gefran.com

GEFRAN

10/2018